REVISION HISTORY				
ZONE	REV	DESCRIPTION	BY	DATE
	A	RELEASE	KP	06/30/2009

SCALE: 1/4

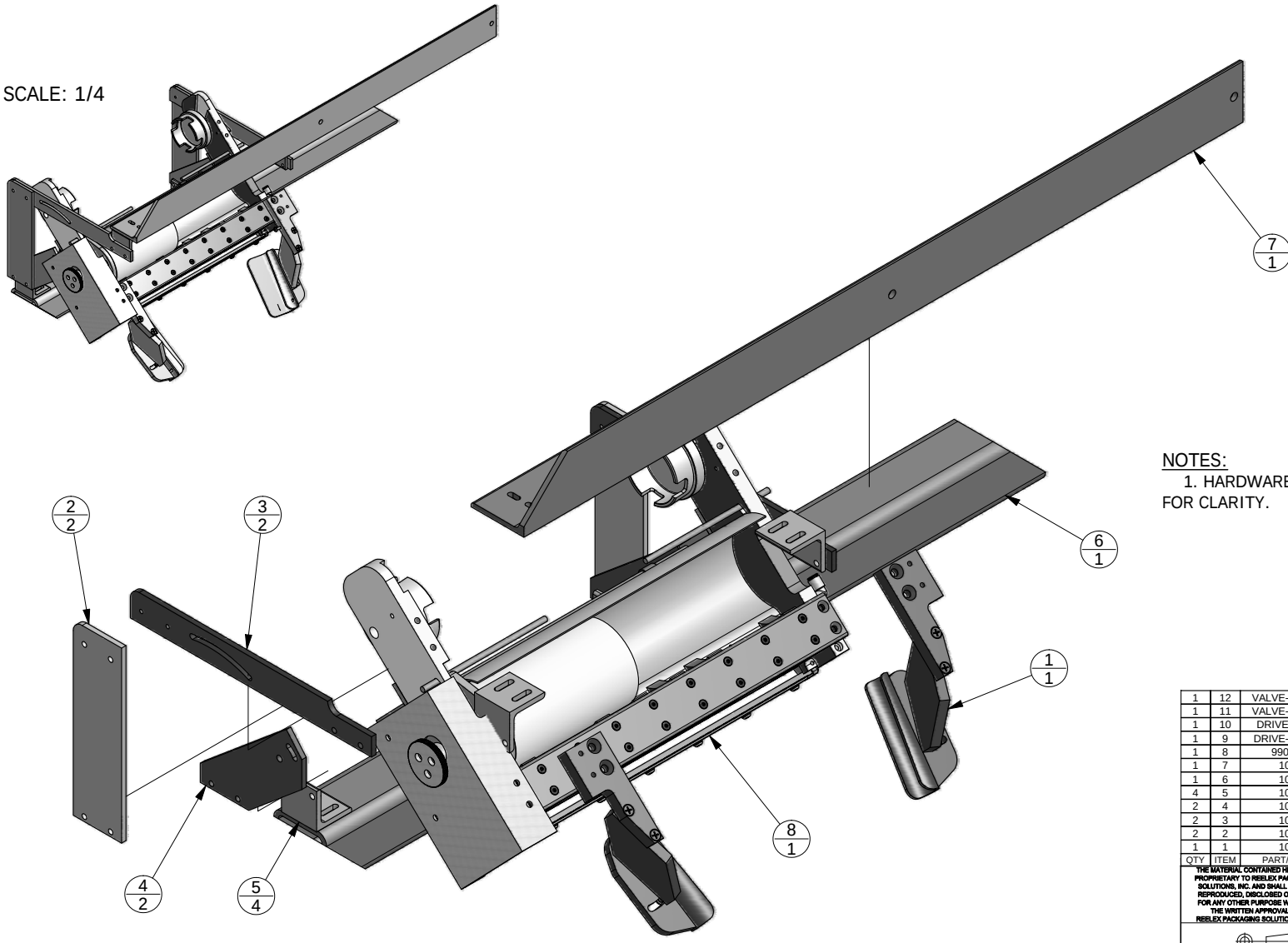

NOTES:

1. HARDWARE & IT'S 9-12, NOT SHOWN FOR CLARITY.

QTY	ITEM	PART/STK NO.	TITLE
1	12	VALVE-42035120	VALVE, SOLENOID-2 POS. SPRG RET
1	11	VALVE-41036120	VALVE, SOLENOID-SING DIRECT ACT'G
1	10	DRIVE-DCR/S1	DRIVE, SIGNAL ISOLATOR
1	9	DRIVE-DCR/C01	DRIVE, REVERSING
1	8	99050-03	WRAPPER ASSY, STRETCH
1	7	10308	ANGLE, MTG, STRETCH WRAP
1	6	10307	BRACE, MTG, STRETCH WRAP
4	5	10306	BRACKET, MTG-STRETCH WRAP
2	4	10305	BRACKET, PIVIOTING-STRETCH WRAP
2	3	10304	MOUNT, HORIZ.-STRETCH WRAP
2	2	10303	MOUNT, VERT.-STRETCH WRAP
1	1	10035	GUIDE ASSY, STRETCH WRAP

THE MATERIAL CONTAINED HEREIN IS PROPRIETARY TO REELEX PACKAGING SOLUTIONS, INC. AND SHALL NOT BE REPRODUCED, DISCLOSED OR USED FOR ANY OTHER PURPOSE WITHOUT THE WRITTEN APPROVAL OF REELEX PACKAGING SOLUTIONS, INC.

THIRD ANGLE PROJECTION

REELEX PACKAGING SOLUTIONS INC.
38 JON BARRETT RD
PATTERSON, NY 12563
P:845.878.7878
F:845.878.7894
www.reelex.com

WRAPPER ASSY, STRETCH-OPTION (D750) "SW-D750/01"

SIZE D | PART/DWG NO. 10034 | REV. A

FILENAME: H:\MechDwgs\PROJECTS\PRODUCTS\10000\10034.dwg | SCALE: 1/2 | DRAWN: BM | DATE: 01/06/2009 | SHEET 1 OF 1

10034 - WRAPPER ASSY, STRETCH-OPTION (D750) "SW-D750/01"